This document contains proprietary information and such informationmay not be disclosed to others for any purposes,
not used for sales/marketing/procurement purposes without written permission

REV	DESCRIPTION OF REVISION	ECN NO.	BY	DATE	APPROVED
A	Initial Release	———	T.Shihua	1/9/15	1/9/15

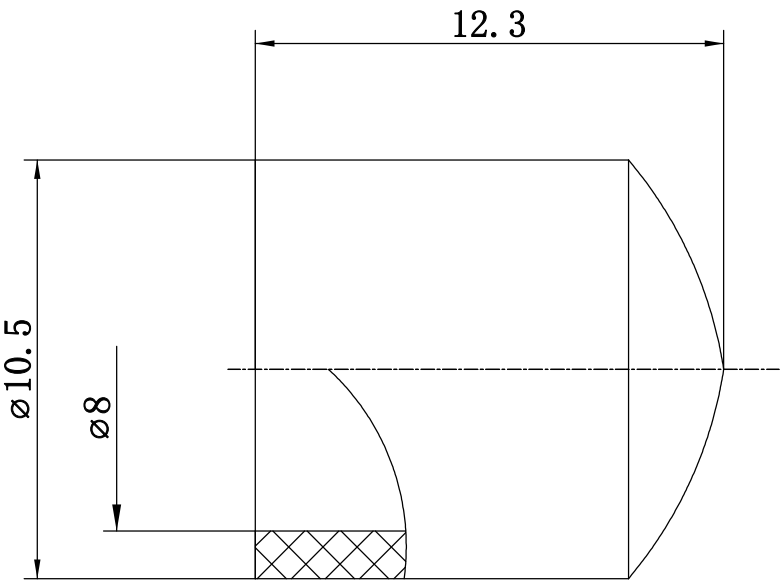

Material: Silicon Rubber(Blue Color)

Notes:

1. ALL SPECIFICATIONS ARE SUBJECT TO CHANGE NOTICE AT ANY TIME
2. CUSTOMER OUTLINE DRAWING FOR REFERENCE ONLY

DRAWN: T.Shihua 1/9/15

ENGINEER: C.Tao 1/9/15

APPROVED: W.Qiang 1/9/15

TOLERANCES UNLESS OTHERWISE SPEFICIED
X ±0.50
.X ±0.20
.XX ±0.10
ANGLES ±1°

TITLE:

SMA Dust Cap

PART NO: TRL-SMA-FCM-1

www.rf-connector-china.com

DIMENSION IN MILLIMETERS (mm)

SIZE:	SCALE:	SHEET:	REV:
A4	N/A	1/1	A